.....
.....
.....
.....
.....
.....
.....
.....
.....
.....
.....
.....
.....
.....
.....
.....
.....
.....
.....
.....
.....
.....
.....
.....
.....
.....
.....

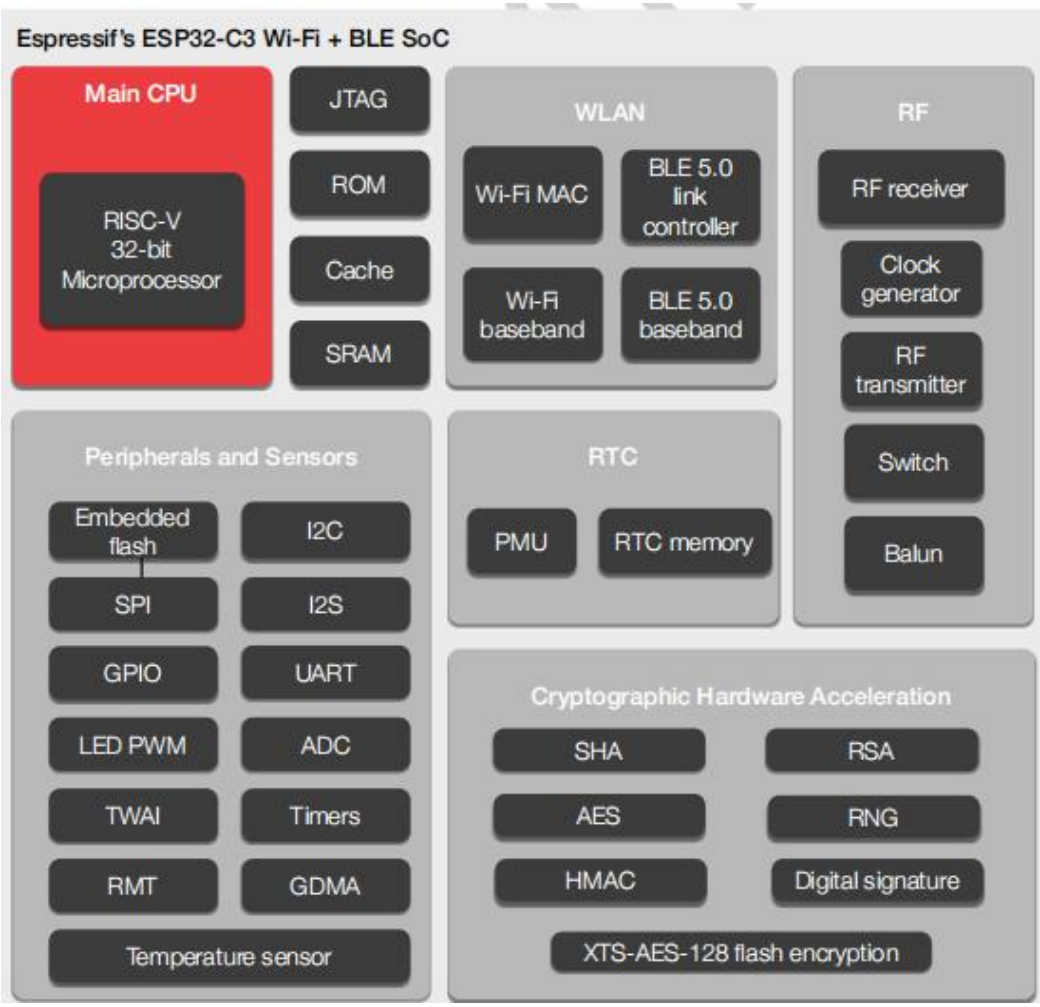
Espressif's ESP32-C3 Wi-Fi + BLE SoC
Main CPU
RISC-V 32-bit Microprocessor
JTAG
ROM
Cache
SRAM
WLAN
Wi-Fi MAC
BLE 5.0 link controller
Wi-Fi baseband
BLE 5.0 baseband
RF
RF receiver
Clock generator
RF transmitter
Switch
Balun
Peripherals and Sensors
Embedded flash
I2C
SPI
I2S
GPIO
UART
LED PWM
ADC
TWAI
Timers
RMT
GDMA
Temperature sensor
RTC
PMU
RTC memory
Cryptographic Hardware Acceleration
SHA
RSA
AES
RNG
HMAC
Digital signature
XTS-AES-128 flash encryption

-
-
-
-
-
-
-
-

■

■

■

■

■

■

■

■

ESP-C3-M1
Ai-Thinker
FCC ID:2ATPO-ESP-C3-X
CMIIT ID:
SRRC
C3FN4

ESP-C3-M1
Ai-Thinker
FCC ID:2ATPO-ESP-C3-X
CMIIT ID:
SRRC
C3FH4

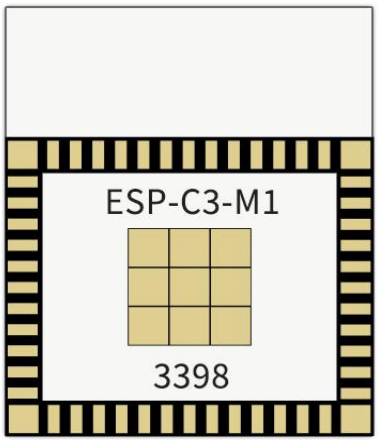
ESP-C3-M1
3398

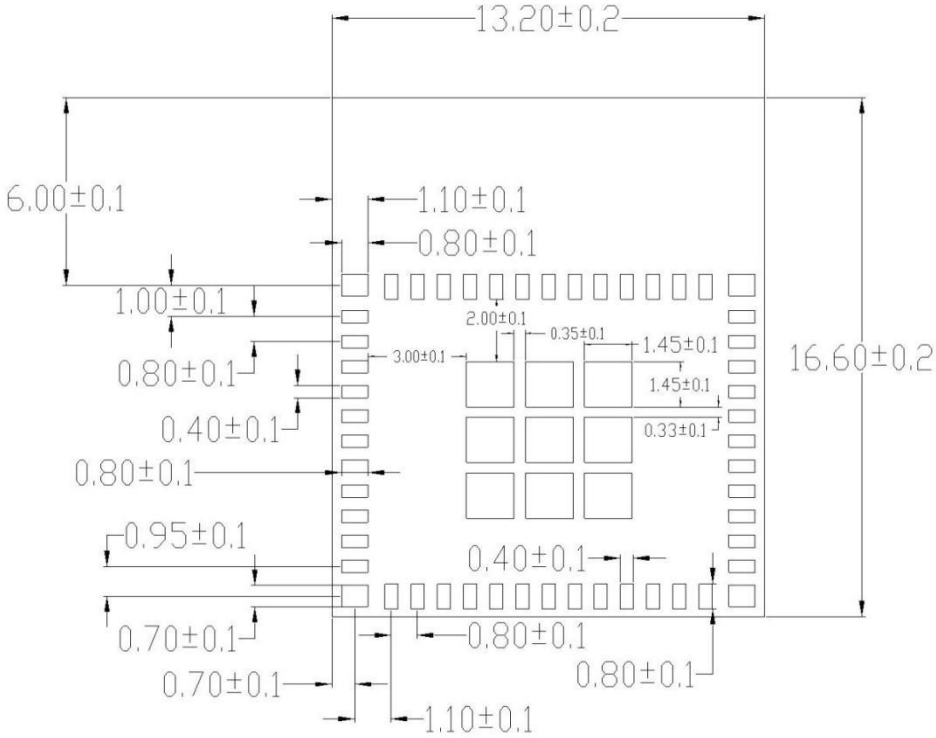
13.20±0.2
6.00±0.1
1.10±0.1
0.80±0.1
1.00±0.1
2.00±0.1
0.35±0.1
1.45±0.1
3.00±0.1
16.60±0.2
0.80±0.1
1.45±0.1
0.40±0.1
0.33±0.1
0.80±0.1
0.95±0.1
0.40±0.1
0.70±0.1
0.80±0.1
0.70±0.1
0.80±0.1
1.10±0.1

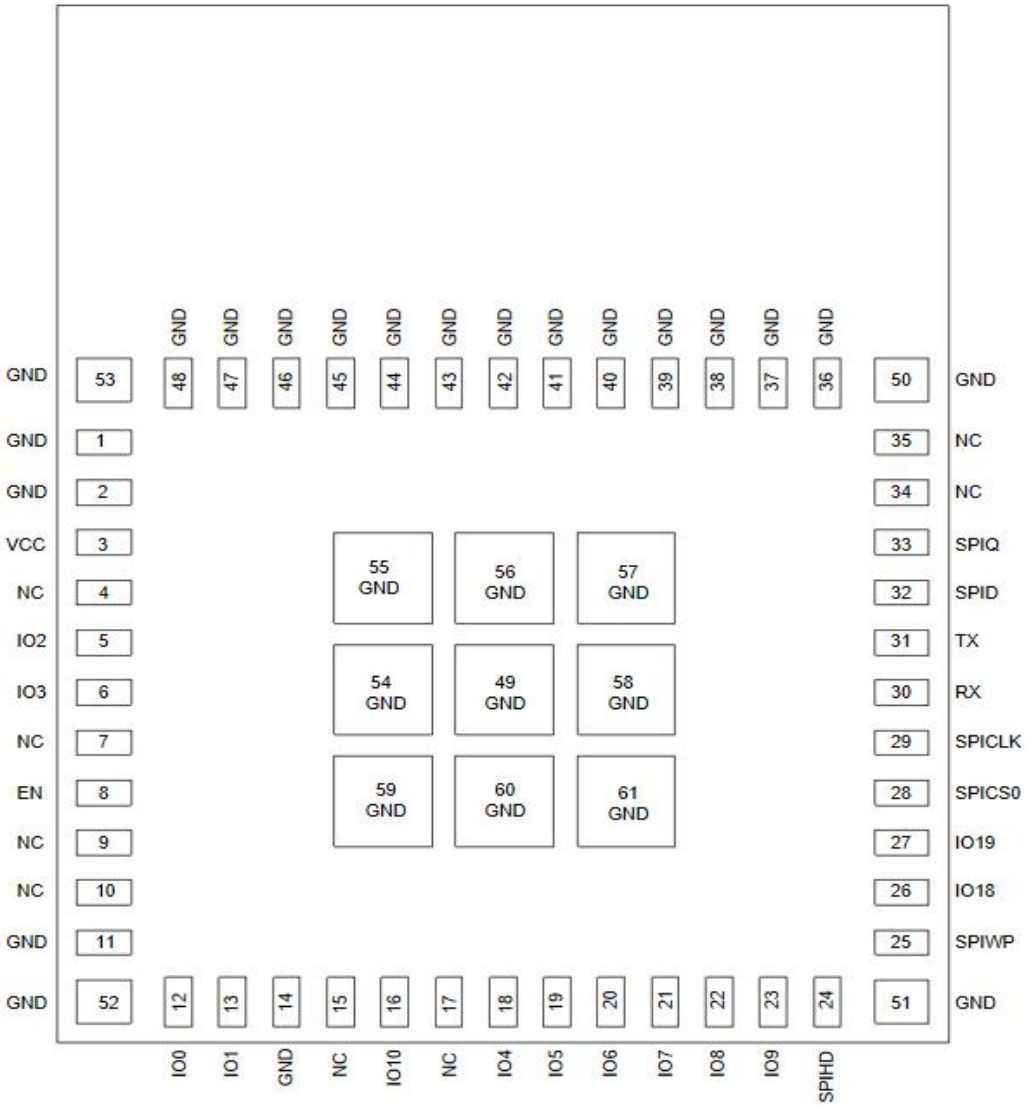
GND 53
GND 1
GND 2
VCC 3
NC 4
IO2 5
IO3 6
NC 7
EN 8
NC 9
NC 10
GND 11
GND 52
48 GND
47 GND
46 GND
45 GND
44 GND
43 GND
42 GND
41 GND
40 GND
39 GND
38 GND
37 GND
36 GND
50 GND
35 NC
34 NC
33 SPIQ
32 SPID
31 TX
30 RX
29 SPICLK
28 SPICS0
27 IO19
26 IO18
25 SPIWP
51 GND
55 GND
56 GND
57 GND
54 GND
49 GND
58 GND
59 GND
60 GND
61 GND
12 IO0
13 IO1
14 GND
15 NC
16 IO10
17 NC
18 IO4
19 IO5
20 IO6
21 IO7
22 IO8
23 IO9
24 SPIHD

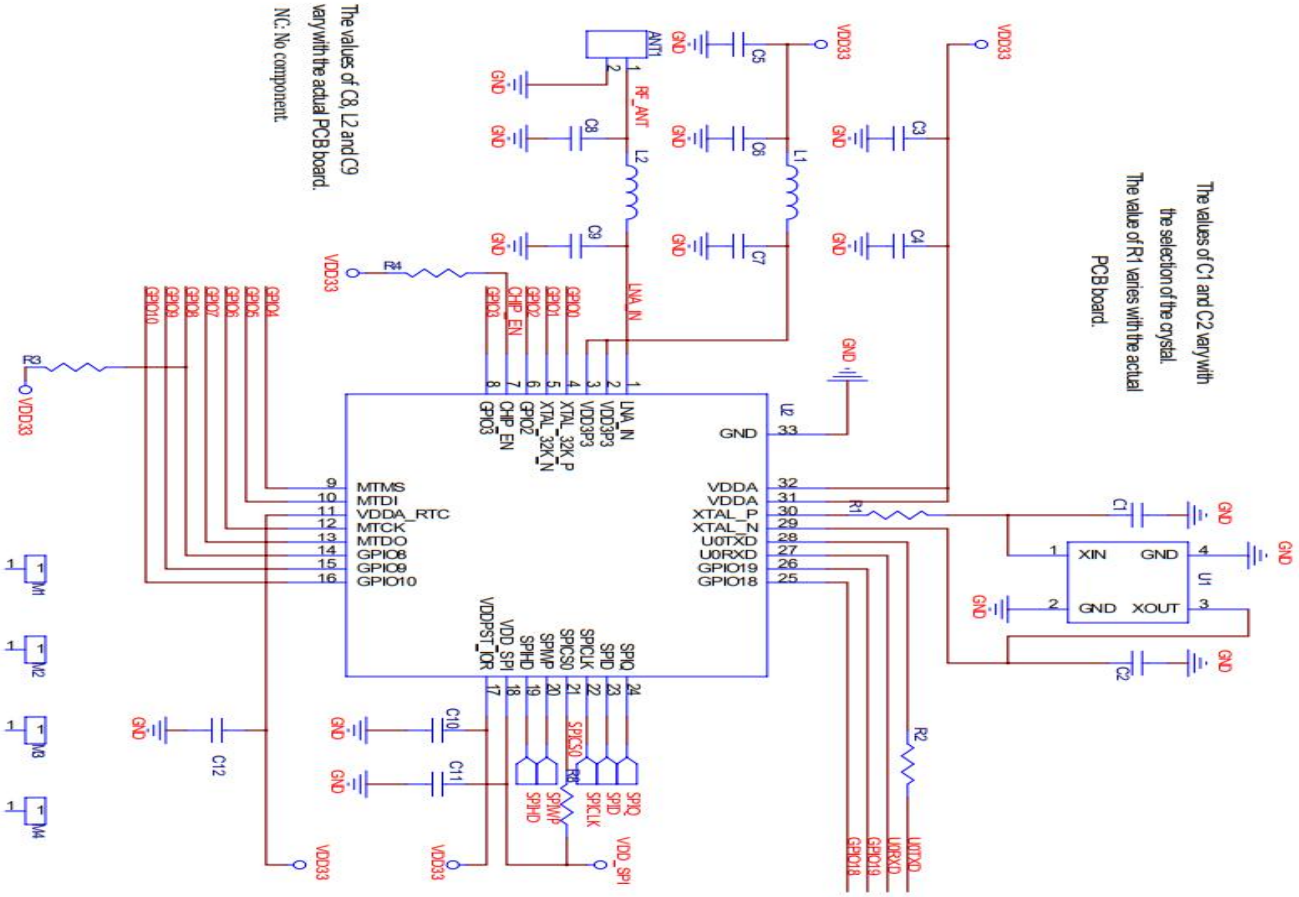
The values of C8, L2 and C9 vary with the actual PCB board.
NC: No component.
The values of C1 and C2 vary with the selection of the crystal.
The value of R1 varies with the actual PCB board.
ANT1
RF_ANT
L2
L1
C5
C6
C7
C8
C9
C3
C4
VDD33
GND
R4
R3
R1
R2
C1
C2
C10
C11
C12
U1
XIN
XOUT
U2
MTMS
MTDI
VDDA_RTC
MTCK
MTDO
GPIO8
GPIO9
GPIO10
VDDA
XTAL_P
XTAL_N
U0TXD
U0RXD
GPIO19
GPIO18
LNA_IN
VDD3P3
XTAL_32K_P
XTAL_32K_N
CHIP_EN
GPIO2
GPIO3
VDDPST_DR
VDD_SPI
SPIHD
SPIWP
SPICS0
SPICLK
SPID
SPIQ
M1
M2
M3
M4

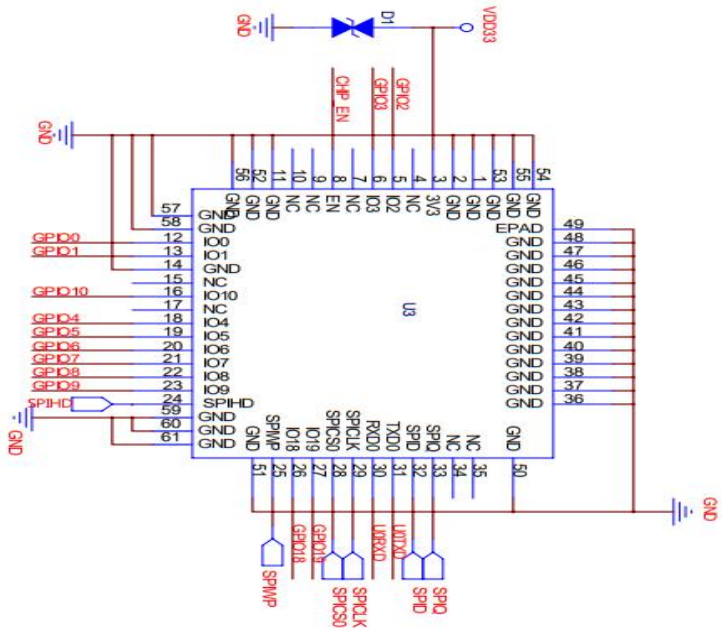
D1
VDD33
GND
CHIP_EN
GPIO2
GPIO3
U3
EPAD
IO0
IO1
IO10
IO4
IO5
IO6
IO7
IO8
IO9
SPIHD
IO18
IO19
SPIWP
SPICS0
SPICLK
RXD0
TXD0
SPID
SPIQ
3V3
EN
IO2
IO3
GPIO0
GPIO1
GPIO10
GPIO4
GPIO5
GPIO6
GPIO7
GPIO8
GPIO9
GPIO18
GPIO19
U0RXD
U0TXD

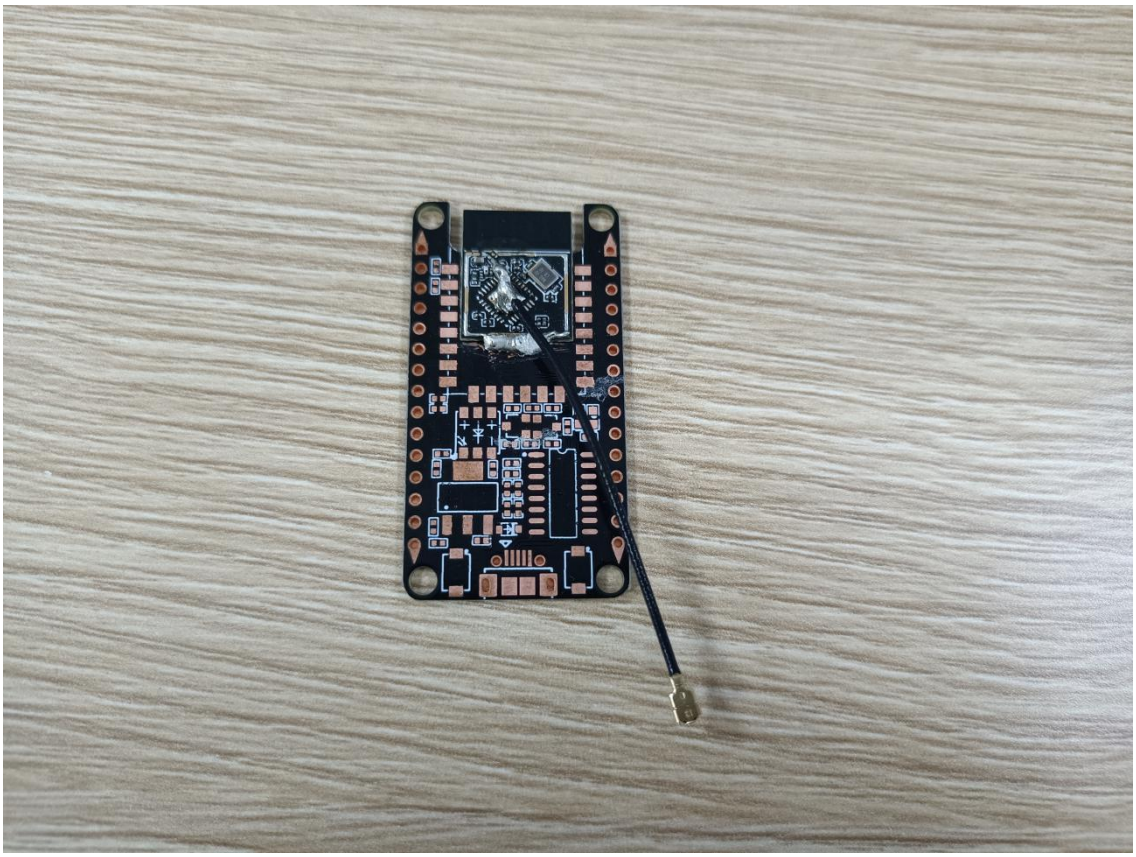

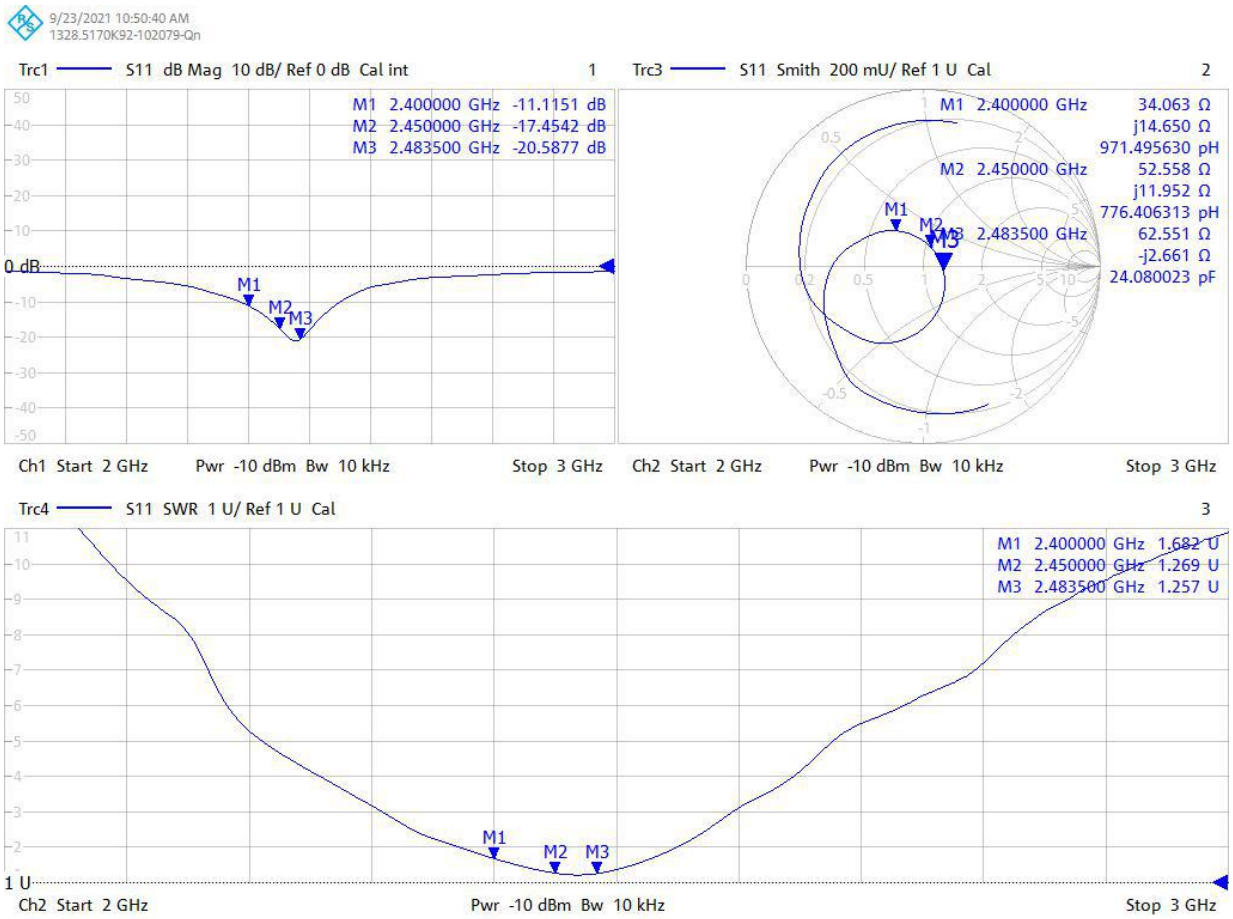
9/23/2021 10:50:40 AM
1328.5170K92-102079-Qn
Trc1 S11 dB Mag 10 dB/ Ref 0 dB Cal int 1
M1 2.400000 GHz -11.1151 dB
M2 2.450000 GHz -17.4542 dB
M3 2.483500 GHz -20.5877 dB
0 dB
Ch1 Start 2 GHz Pwr -10 dBm Bw 10 kHz Stop 3 GHz
Trc3 S11 Smith 200 mU/ Ref 1 U Cal 2
M1 2.400000 GHz 34.063 Ω j14.650 Ω 971.495630 pH
M2 2.450000 GHz 52.558 Ω j11.952 Ω 776.406313 pH
M3 2.483500 GHz 62.551 Ω -j2.661 Ω 24.080023 pF
Ch2 Start 2 GHz Pwr -10 dBm Bw 10 kHz Stop 3 GHz
Trc4 S11 SWR 1 U/ Ref 1 U Cal 3
M1 2.400000 GHz 1.682 U
M2 2.450000 GHz 1.269 U
M3 2.483500 GHz 1.257 U
1 U
Ch2 Start 2 GHz Pwr -10 dBm Bw 10 kHz Stop 3 GHz

2400.0MHz H+V, Eff: 51.8%

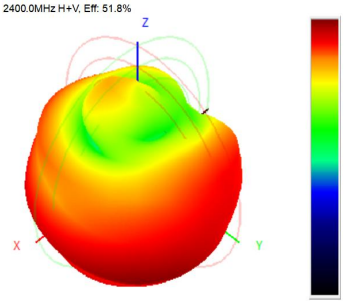

2400.0MHz Total(E1-XZ), Max= 0.79dBi

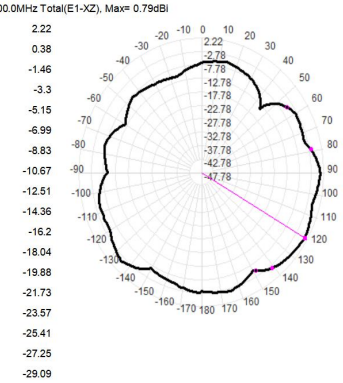

2400.0MHz Total(E2-YZ), Max= 1.03dBi

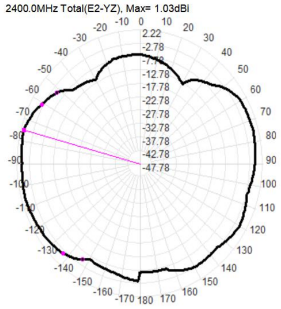

Total(H-XY), Max= 2.22dBi, CirD=11.66

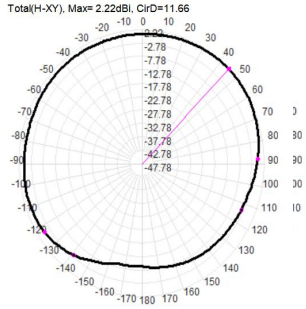

2450.0MHz H+V, Eff: 57.8%

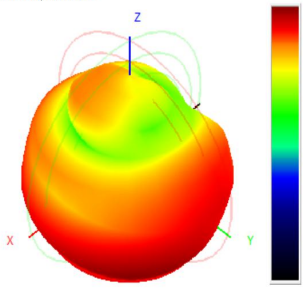

2450.0MHz Total(E1-XZ), Max= 0.80dBi

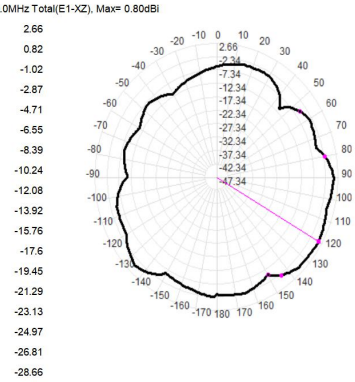

2450.0MHz Total(E2-YZ), Max= 1.60dBi

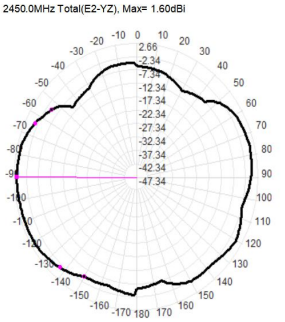

Total(H-XY), Max= 2.66dBi, CirD=13.49

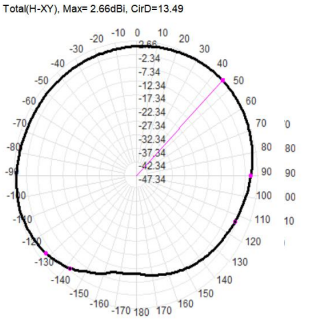

2500.0MHz H+V, Eff: 61.6%

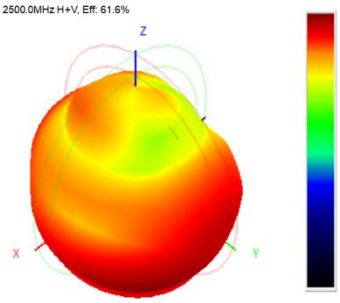

2500.0MHz Total(E1-XZ), Max= 1.15dBi

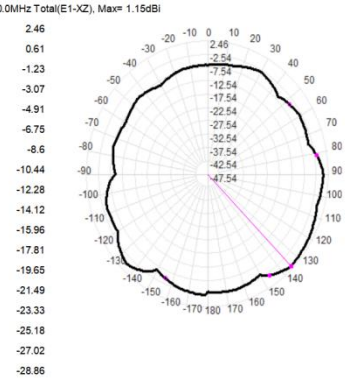

2500.0MHz Total(E2-YZ), Max= 2.12dBi

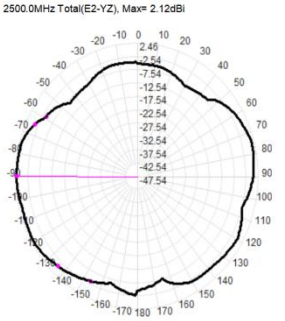

Total(H-XY), Max= 2.46dBi, CirD=12.08

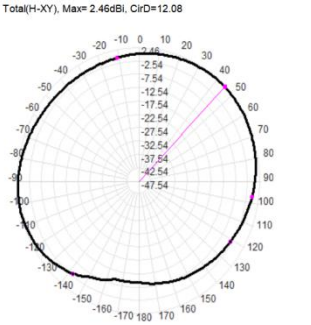

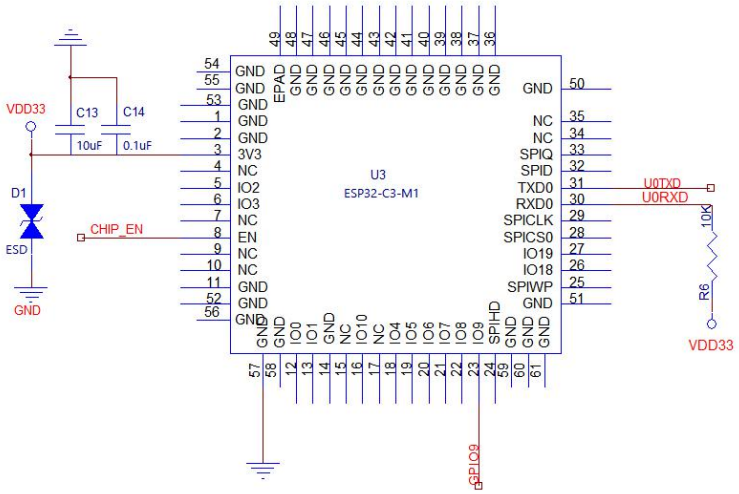
U3
ESP32-C3-M1
VDD33
C13
10uF
C14
0.1uF
D1
ESD
GND
CHIP_EN
U0TXD
U0RXD
10K
R6
VDD33
GPIO9
EPAD
3V3
IO2
IO3
EN
IO0
IO1
IO10
IO4
IO5
IO6
IO7
IO8
IO9
SPIHD
NC
SPIQ
SPID
TXD0
RXD0
SPICLK
SPICS0
IO19
IO18
SPIWP

■

■

■

■

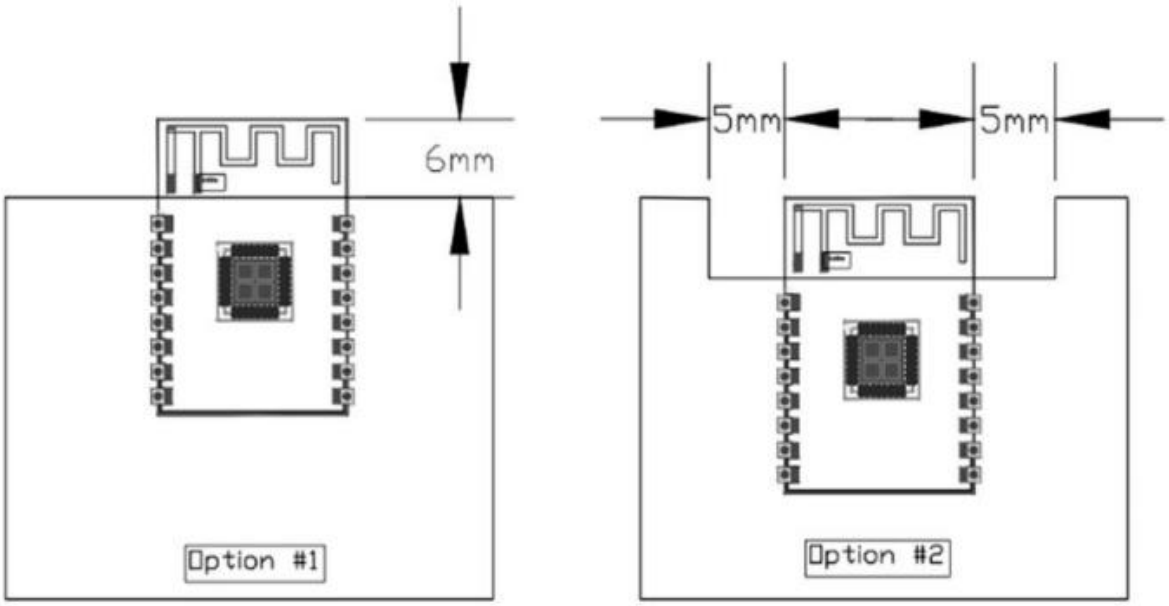
6mm
Option #1
5mm
5mm
Option #2

■

■

■

■

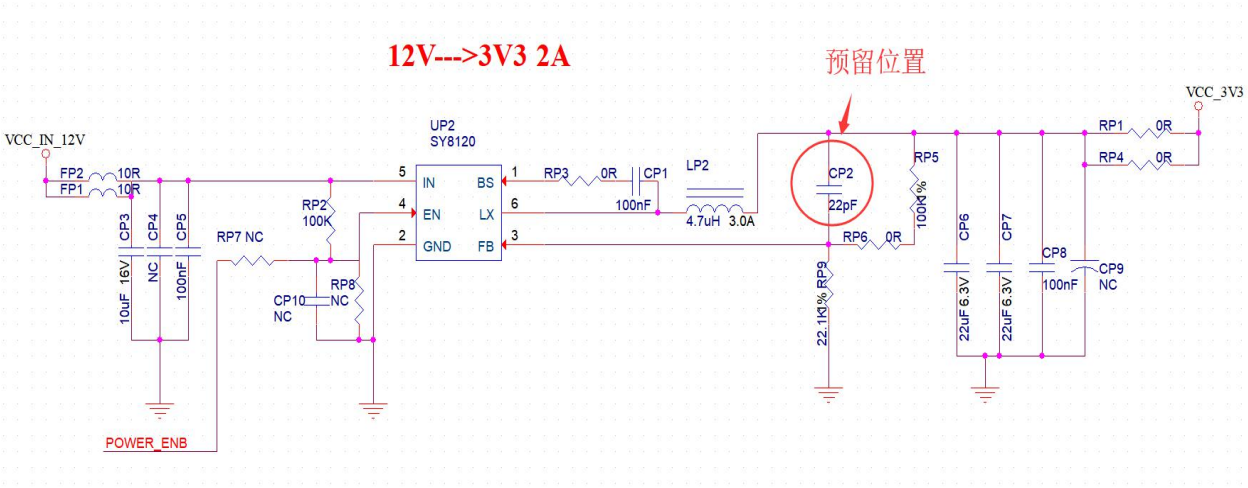
12V--->3V3 2A
预留位置
VCC_IN_12V
VCC_3V3
UP2
SY8120
IN
EN
GND
BS
LX
FB
FP2 10R
FP1 10R
CP3 10uF 16V
CP4 NC
CP5 100nF
RP7 NC
RP2 100K
RP8 NC
CP10 NC
RP3 0R
CP1 100nF
LP2 4.7uH 3.0A
CP2 22pF
RP6 0R
RP9 22.1K1%
RP5 100K%
CP6 22uF 6.3V
CP7 22uF 6.3V
CP8 100nF
CP9 NC
RP1 0R
RP4 0R
POWER_ENB

■

■

■

■

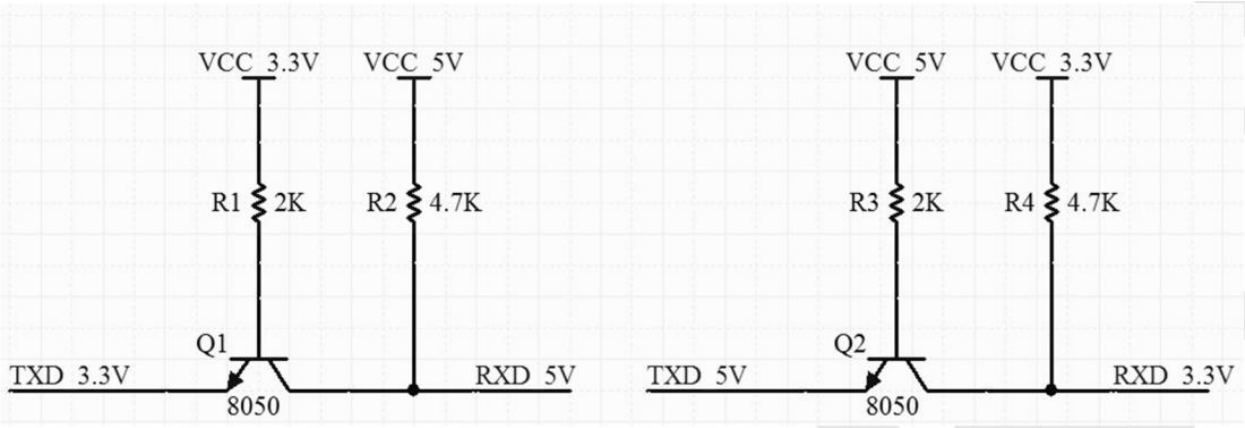
VCC_3.3V
VCC_5V
R1 2K
R2 4.7K
Q1
TXD_3.3V
8050
RXD_5V
VCC_5V
VCC_3.3V
R3 2K
R4 4.7K
Q2
TXD_5V
8050
RXD_3.3V

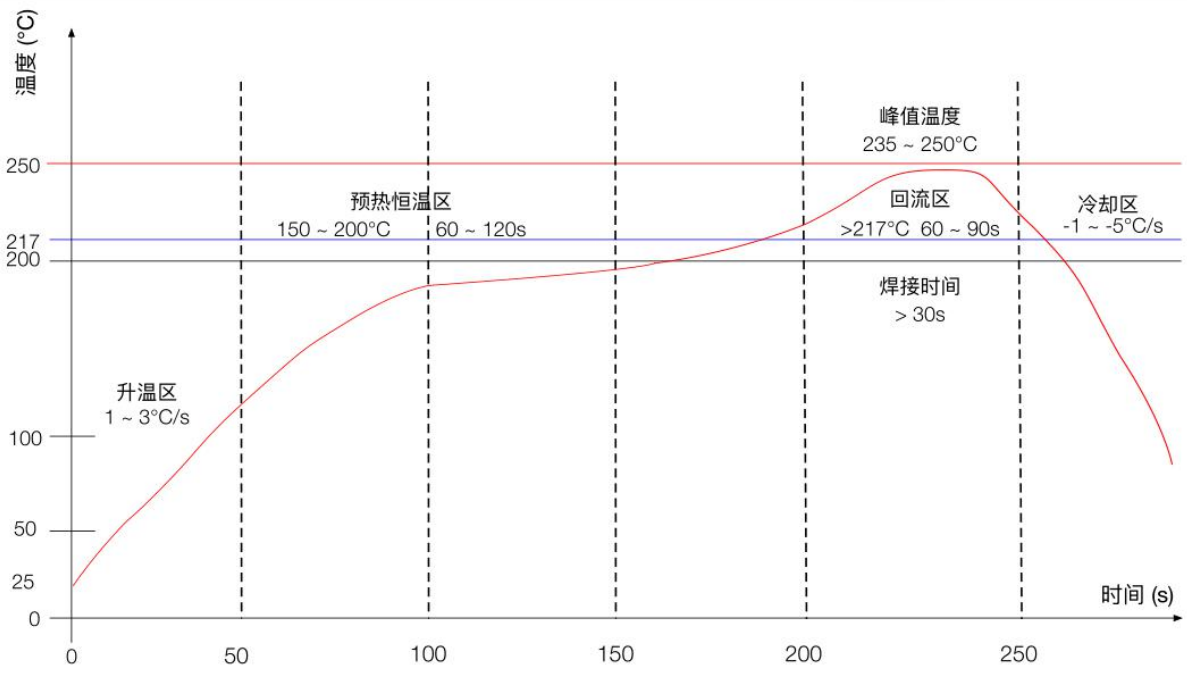

升温区 — 温度：25 ~ 150°C 时间：60 ~ 90s 升温斜率：1 ~ 3°C/s
预热恒温区 — 温度：150 ~ 200°C 时间：60 ~ 120s
回流焊接区 — 温度：>217°C 时间：60 ~ 90s；峰值温度：235 ~ 250°C 时间：30 ~ 70s
冷却区 — 温度：峰值温度 ~ 180°C 降温斜率 -1 ~ -5°C/s
焊料 — 锡银铜合金无铅焊料 (SAC305)